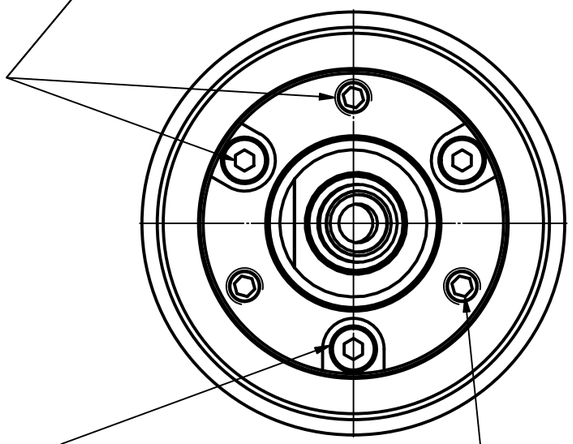

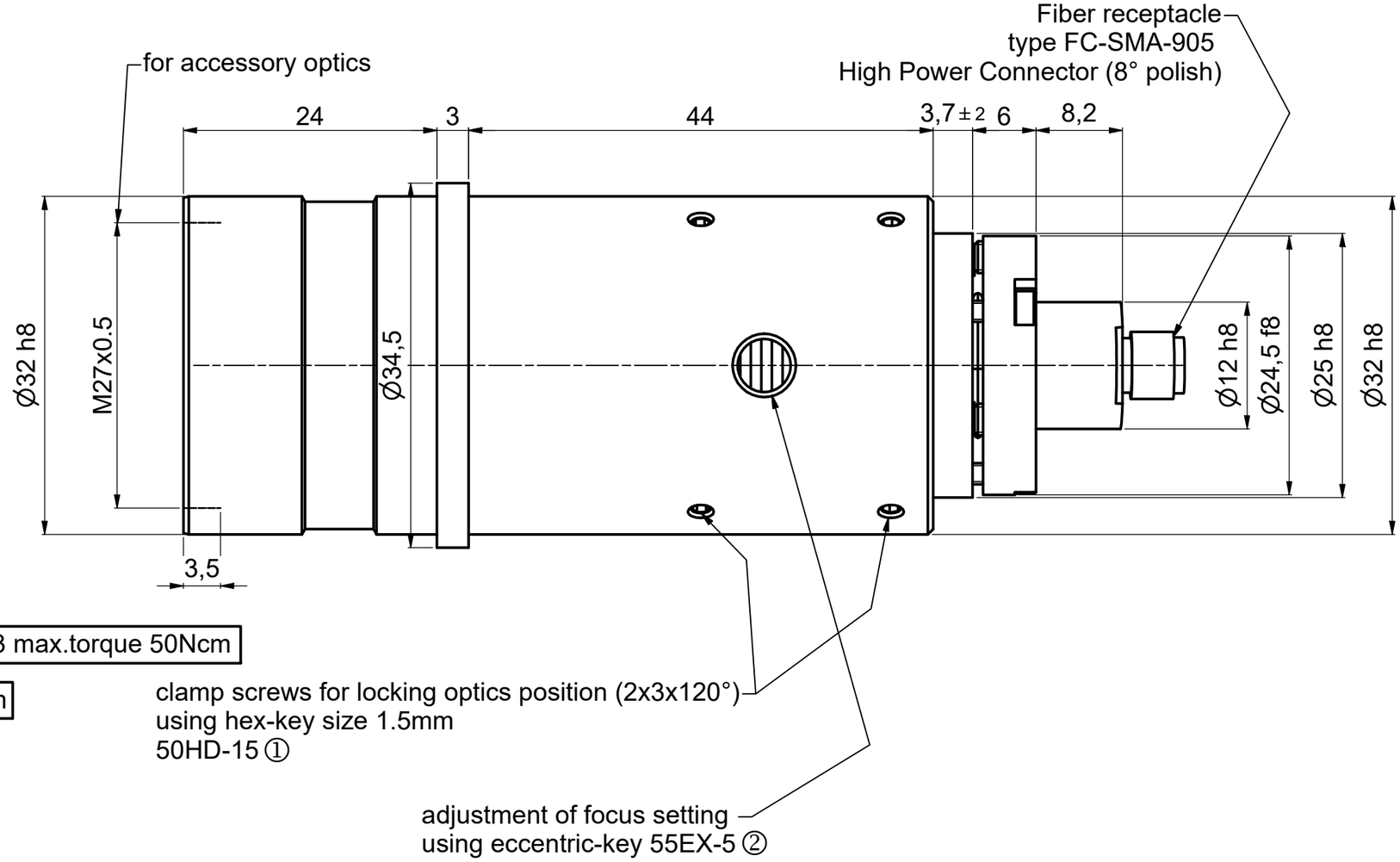

Tools for assambly and adjustment

hex-key
size 1.5mm
50HD-15

eccentric-key
55EX-5

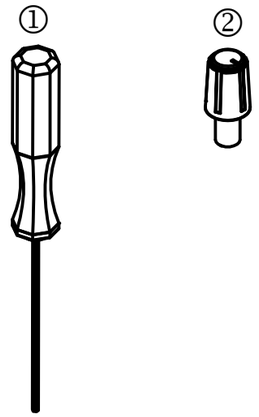

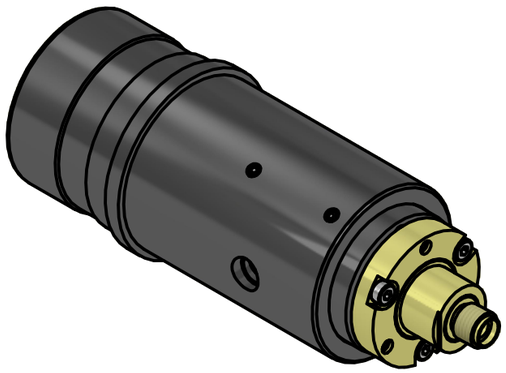

Dimensions DIN EN ISO 14405			
	Date	Name	
editor	21.11.2022	Tp	
exam.			
free			

Schäfter+Kirchhoff GmbH
OPTICS, METROLOGY, AND PHOTONICS

File: 980241195000.idw

Scale: 2:1

60FC-SMA-T23-F75-xx

Fiber collimator f'75

Customer Drawing

9802-4119-5000

Sice: A3

Page: 2

Model: 980241195000.iam