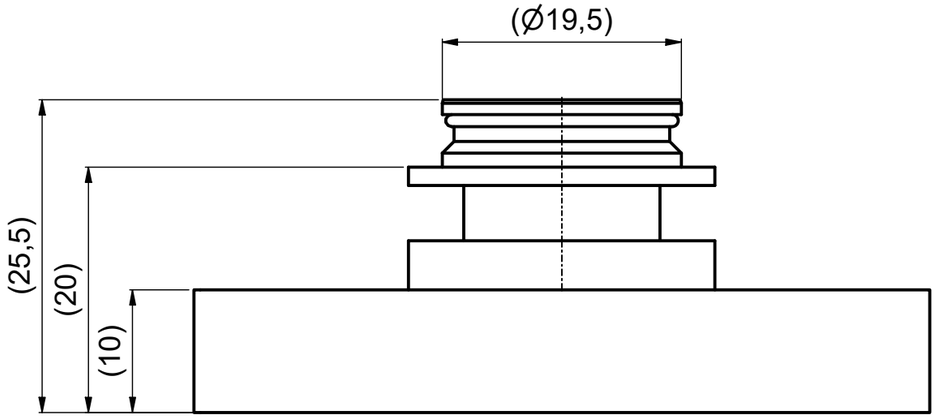

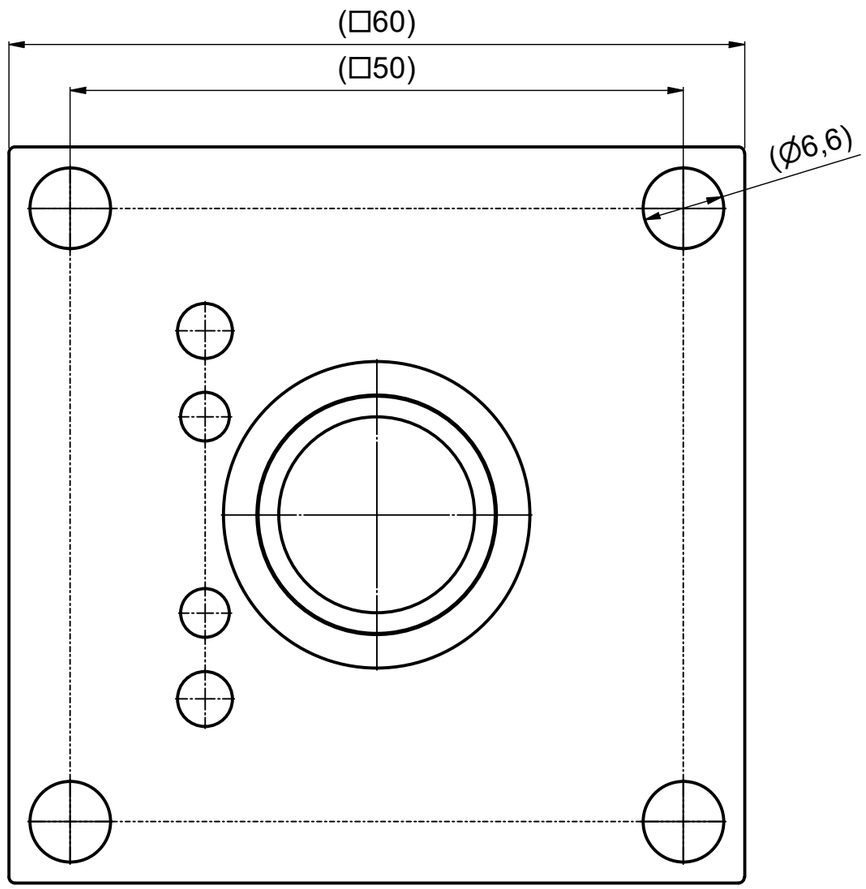

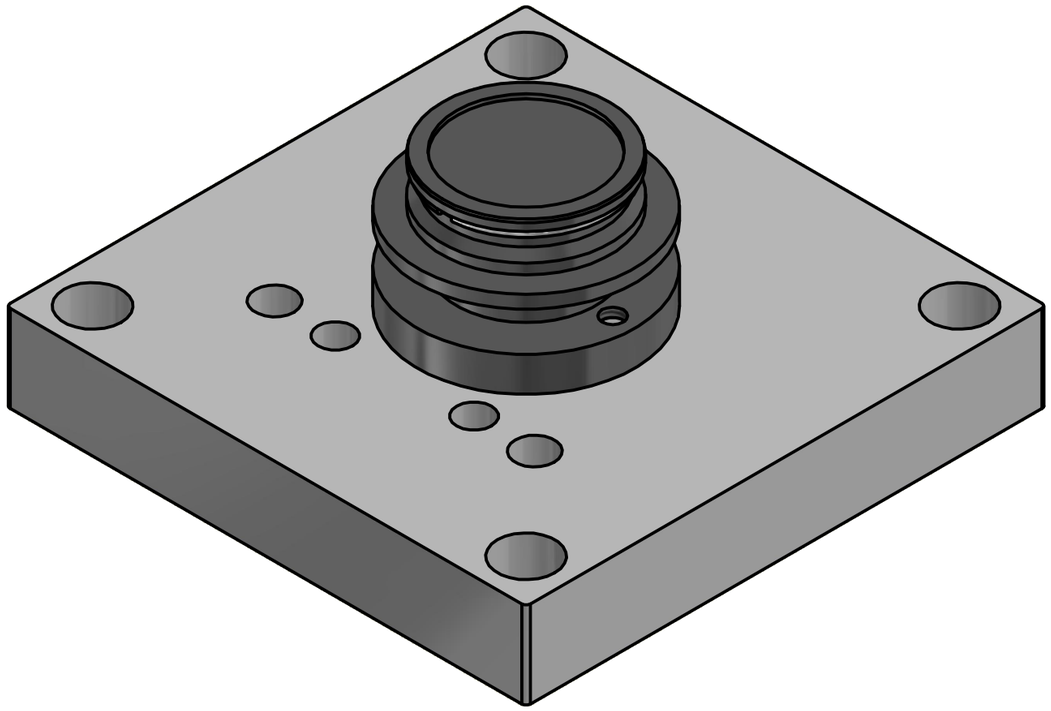

For information only
Not for manufacturing purposes

Dimensions DIN EN ISO 14405					Scale: 2:1	
					48MC-GP-60-M6	
				Date / Name	Mounting console	
				editor 07.05.2019 Tp	for the multicube system, for breadboard mount	
				exam.		
				free	Customer Drawing	
				Schäfter+Kirchhoff GmbH OPTICS, METROLOGY, AND PHOTONICS	9809-1031-0601	Size A3
State	Changes	Date	Name	File: 980910310601.idw	Model: 980910310601.iam	Page: 2 / 2